Customer Approved	

REV NO.	Contents	Date
V0	First release	2025-1-16

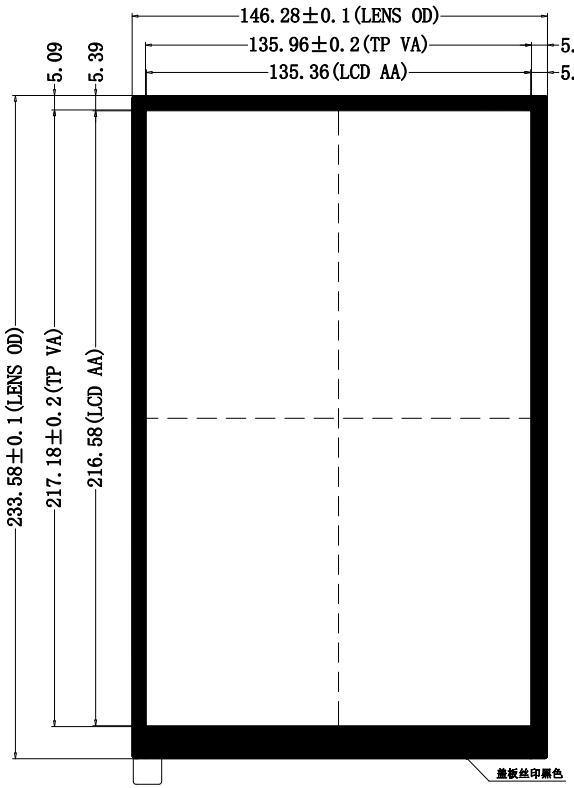

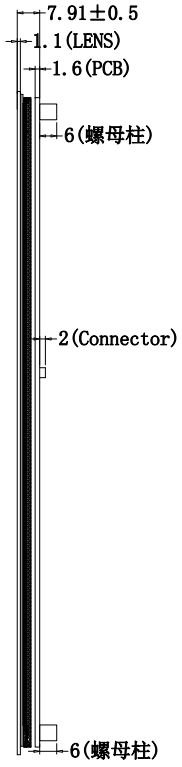

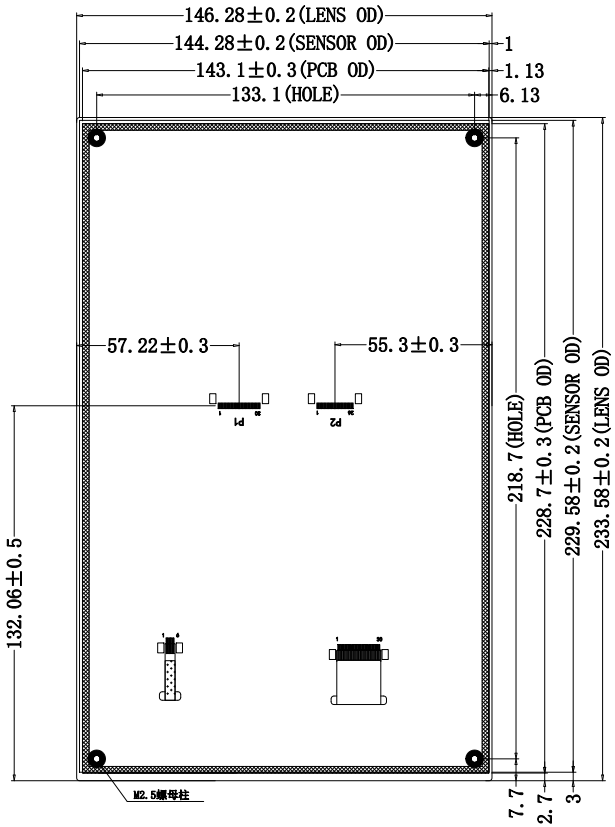

P1 intreface

PIN	SYMBOL
1	GND
2	MIPI_DON
3	MIPI_DOP
4	GND
5	MIPI_D1N
6	MIPI_D1P
7	GND
8	MIPI_CLKN
9	MIPI_CLKP
10	GND
11	MIPI_D2N
12	MIPI_D2P
13	GND
14	MIPI_D3N
15	MIPI_D3P
16	GND
17	BL_CTR
18	NC
19	NC
20	LCD_RST
21	LCD_ID
22	LCD_PWR
23	TP_SCL
24	TP_SDA
25	TP_INT
26	TP_RST
27	GND
28	5V
29	5V
30	5V

P2 intreface

PIN	SYMBOL
1	5V
2	5V
3	TP_INT
4	TP_SCL
5	TP_SDA
6	TP_RST
7	BL_CTR
8	LCD_ID
9	GND
10	MIPI_D1P
11	MIPI_D1N
12	GND
13	MIPI_CLKP
14	MIPI_CLKN
15	GND
16	MIPI_DOP
17	MIPI_DON
18	GND
19	MIPI_D2P
20	MIPI_D2N
21	GND
22	MIPI_D3P
23	MIPI_D3N
24	GND
25	LCD_RST
26	GND

WKS 慧勤智远

Display Type:	10.1'' IPS	Interface	MIPI DSI + I2C	Pixel Pitch:	0.1692mm×0.1692mm	Product NO:		WKS101HD031-WCT			
Display Mode:	Normally Black	Operating Temp.	-20℃ to +70℃	Brightness:	-	Part NO:		TOUCH Moudel		APPD:	
Viewing Direction:	ALL VIEW	Storage Temp.	-30℃ to +80℃	Backlight:	32 LED	REV:	V0	Unit:	mm	CHKD:	
Resolution:	800(RGB)X1280	Structure:	LCD+TOUCH+PCB	Material Note:	ROHS Request	Date:	2025-1-16	Scale:	1:1	DWN:	Jason
THIS DRAWING IS PROPERTY OF WAIKEN SMART CO. LTD, IT CANNOT BE REPRODUCED WITHOUT PERMISSION.						Unmarked Tolerance: ±0.20 mm				Sheet:	1 OF 1